T 1300 79 49 29
F (07) 4197 4455
E enquiry@frasercoast.qld.gov.au
www.frasercoast.qld.gov.au

Return Information: (Form must be returned with payment via cheque, cash or credit Card details)
Fax: *07* 4197 4455 **Post: PO Box 1943, Hervey Bay** **In Person: Council Administration Centres**

Application for Installation of Monument/Plaque

Purpose of Form:* *The information contained in this form will be used to process your Application for installation of monument/plaque.

Date: _____

CEMETERY (Please tick)				
☐ MARYBOROUGH	☐ POLSON	☐ HOWARD	☐ TIARO	☐ MUNNA CREEK

APPLICANT DETAILS		
Mr/Mrs/Ms/Miss (Please circle): First Name Surname	**Relationship to Deceased:**	**Telephone No:**
Address:		**Postcode:**
Signature of Applicant:		

TICK 1 BOX ONLY BELOW
I am the person: ☐ in whose name the Right of Burial was issued. ☐ who has attached written authority from the person in whose name the Right of Burial was issued. ☐ who has Council authority for the use of the grave *(Council may request applicant to provide further information).*

WORK TO BE COMPLETED BY	
Name:	**Telephone No:**
Address:	

GRAVE DETAILS			
Section (Please circle): Monumental / Lawn	**Section/Plot No:**	**Grave No:**	**Date of Burial:**
Name of Deceased:			

A plan (drawn to scale) of the proposed monument shall accompany the application. (The back of this application form may be used for this purpose or a separate page may be attached). Information to be included shall include monument materials, thickness, size of plaque, reinforcement (if any), height of monument aboveground (or in beam sections above the concrete mowing strips if applicable) and other relevant details.

Please Note

- See overleaf for conditions applicable to the installation of plaques or monuments in the relevant sections of the Cemeteries.

FCRC OFFICE USE ONLY			
Fee Paid:	Receipt No:	Receipt Date:	Cashier:

Privacy Notice: In using this form you are providing personal information such as name and contact details. This information will be used only for the purpose stated above and will only be accessed by persons who have been authorised to do so. Your personal information is handled in accordance with the *Information Privacy Act 2009*.
More ...

T 1300 79 49 29
F (07) 4197 4455
E enquiry@frasercoast.qld.gov.au
www.frasercoast.qld.gov.au

Return Information: (Form must be returned with payment via cheque, cash or credit Card details)

Fax: *07* 4197 4455 **Post: PO Box 1943, Hervey Bay** **In Person: Council Administration Centres**

DIAGRAM:-

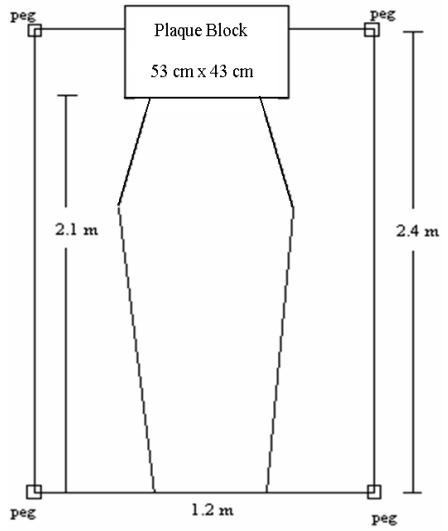

CONDITIONS FOR INSTALLATION OF PLAQUES / MONUMENTS:-

Conditions governing the laying of plaques / monuments in the Maryborough, Polson, Howard and Tiaro Cemeteries are set out hereunder and must be strictly adhered to:-

1. Each plot is 1.2 metres wide and 2.4 metres long with the head of the grave being on the western extremity or closest to the concrete beam. The plot is marked by 4 pegs at each corner and these are driven in just below ground level. It is imperative that these pegs be uncovered before commencement of any work.

2. The grave has been so dug that there is at least 37.5 centimetres of untouched earth at the head of the plot. It is in this position that the concrete block and plaque is to be laid (in the case of lawn plaques).

3. Concrete blocks MUST be 53 cm x 43 cm x 7.5 cm thick and suitably reinforced and MUST be laid as set out in the attached diagram.

4. Installation requirements for individual sections of the Cemeteries are as follows:-
   - Plaques to be installed in the Maryborough Garden of Rest Lawn Cemetery (except Sections III, IV and V), the Polson Garden of Rest and Howard Garden of Rest shall be approximately 530mm x 430mm and be installed level with the surrounding ground.
   - Plaques to be installed in Sections III, IV and V of the Maryborough Garden of Rest Lawn Cemetery and both Lawn Sections of Tiaro Cemetery shall be installed between the concrete mowing strips and be no higher than 150mm above the upper level of the adjoining concrete mowing strips, and the flower holders being installed not higher than 150mm above the upper level of the concrete mowing strips.
   - Plaques to be installed in the Polson Garden of Peace shall be installed between the concrete mowing strips and be installed level with the top of the adjoining concrete mowing strips.
   - The finished size of monuments installed in all Monumental Sections of the Cemeteries shall not exceed 2.4m x 1.2m (8ft x 4ft), with a minimum opening of 2.0m to allow for re-opening.

5. That Council's official grave number **must be** embedded in the right hand top corner of the concrete block/monumental border.

6. The size of the plaque is optional provided it does not overlap the concrete block.

7. When the plaque is attached to the concrete block, under no circumstances must it be above ground level.

8. Prior to any monumental work being undertaken, a Council Officer will locate and mark out the plot. **NO** work may start until the exact plot is located by Council Officers.

9. An application must be submitted to the Council for approval on this form, together with a Statutory Declaration (if applicable) and the prescribed fee, after which a Council Officer will mark out the grave plot.

10. Any further queries should be directed to the Cemeteries Co-ordinator on (07) 4121 7594 or 0419 744 025.

Privacy Notice: In using this form you are providing personal information such as name and contact details. This information will be used only for the purpose stated above and will only be accessed by persons who have been authorised to do so. Your personal information is handled in accordance with the *Information Privacy Act 2009*.
More ...